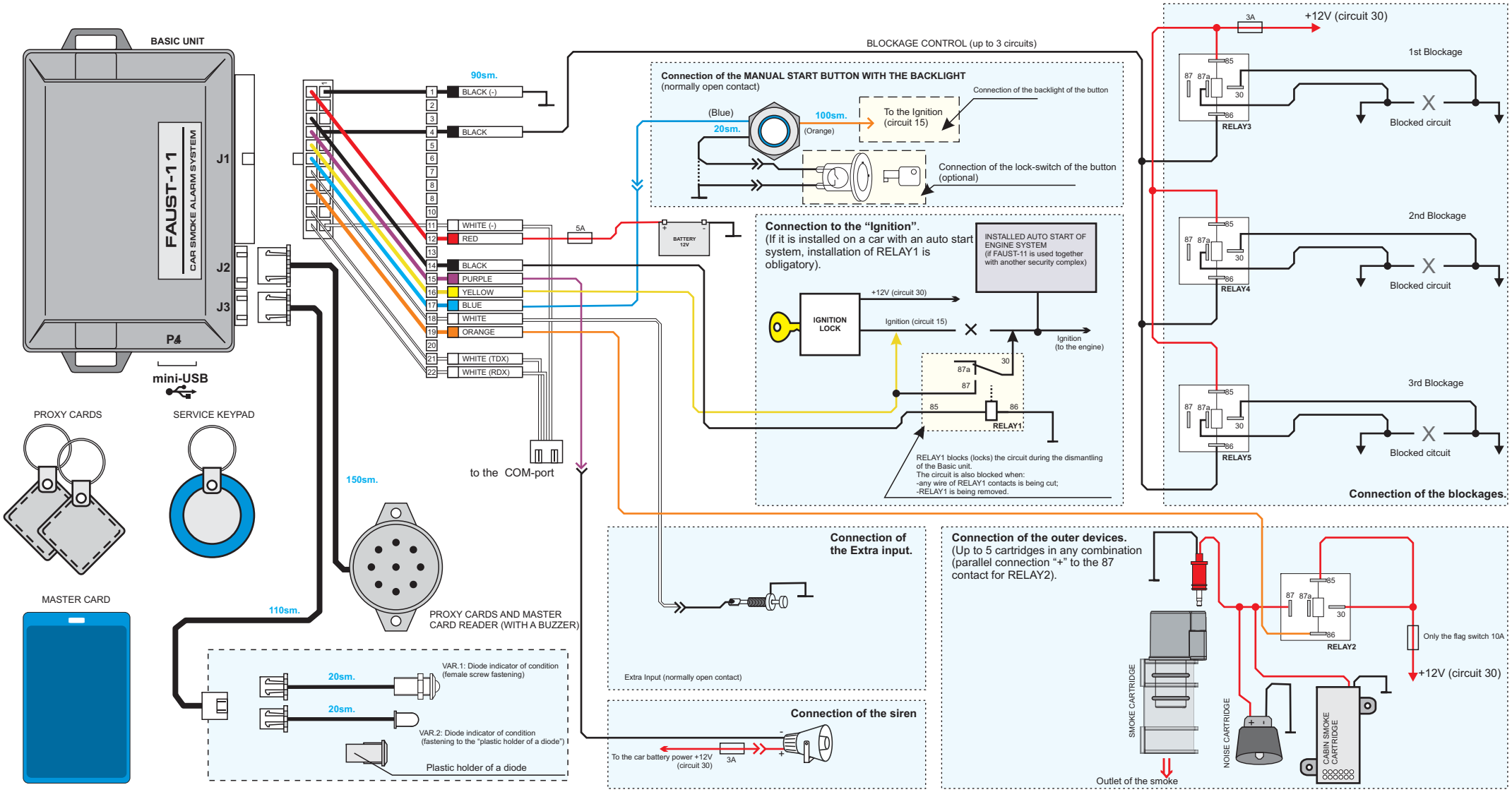FAUST-11 WIRING DIAGRAM